Suzhou Talent Microwave Inc.
sales@TalentMW.com
www.TalentMW.com

Part No.: TBG-0510-3S-180

180 Degree 3dB Bridge

电气特性 Electrical:

工作频率 Frequency Range: 0.5-1GHz

耦合度Coupling : 3dB

插入损耗 Insertion Loss: 0.4db typ, 0.6db max

隔离度Isolation: 25db typ, 22db min

驻波 VSWR: 1.2 typ, 1.3 max

幅度平衡 Amplitude Balance: ±0.6dB max

相位平衡Phase Balance: ≤±10 degree

耐功率 Power Handling: 50 Watt

阻抗 Impedance: 50 OHMS

机械特性 Mechanical:

温度范围Temperature Range: -45° C - +85° C

接口Connectors: SMA-Female

相对湿度Relative Humidity: 0 ~ 90%

外形尺寸Outline Drawing:

Unit: mm

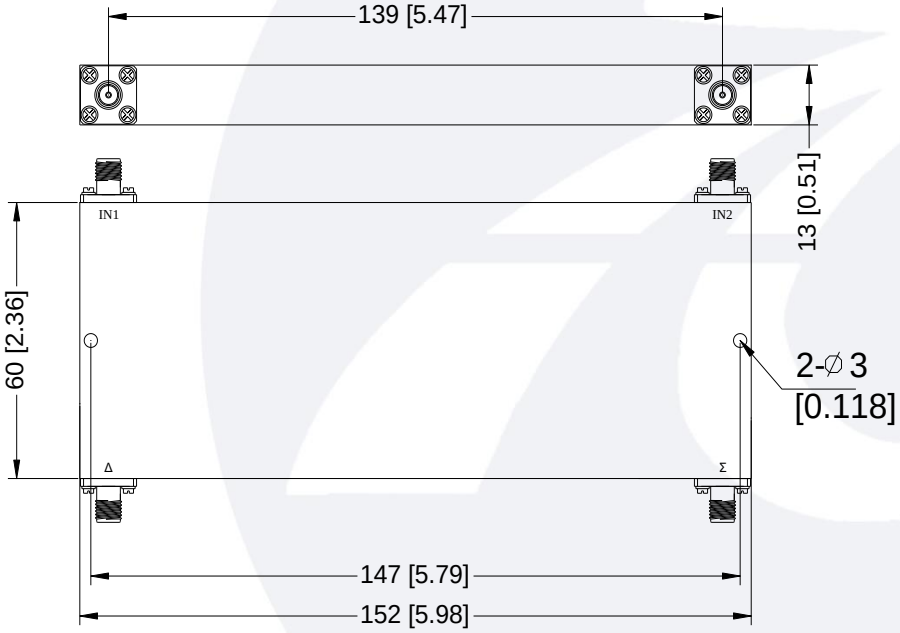

© 2014 Talent Microwave

Suzhou Talent Microwave Inc.
sales@TalentMW.com
www.TalentMW.com

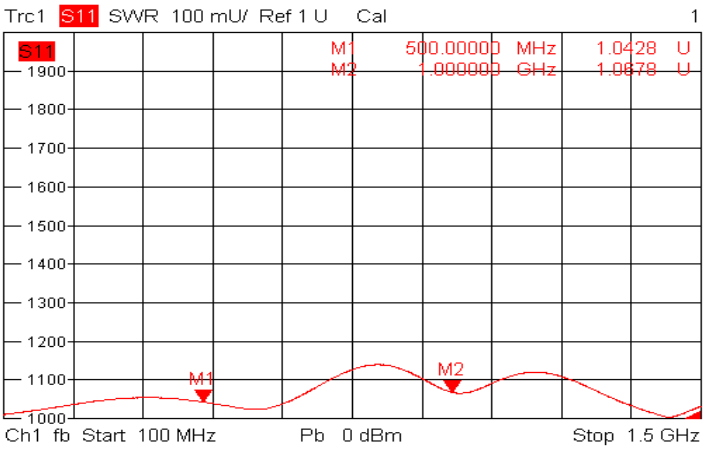

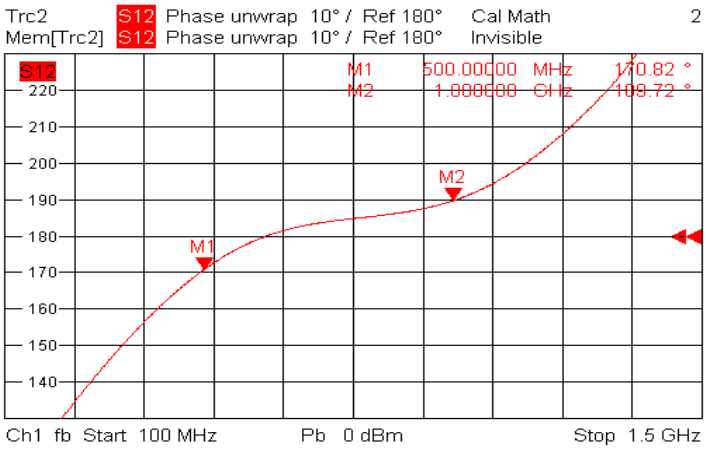

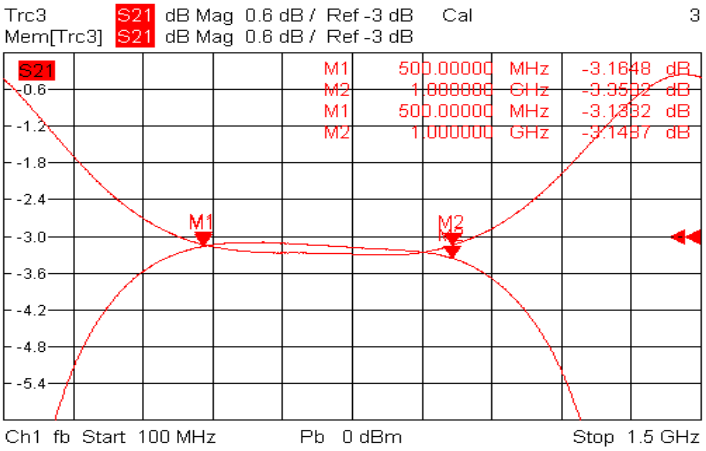

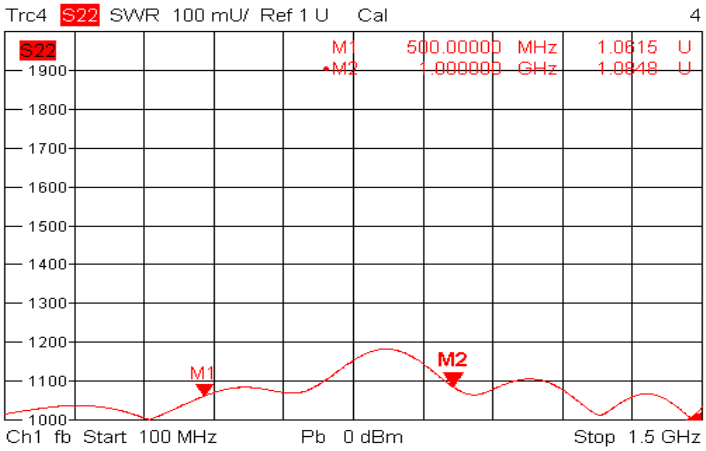

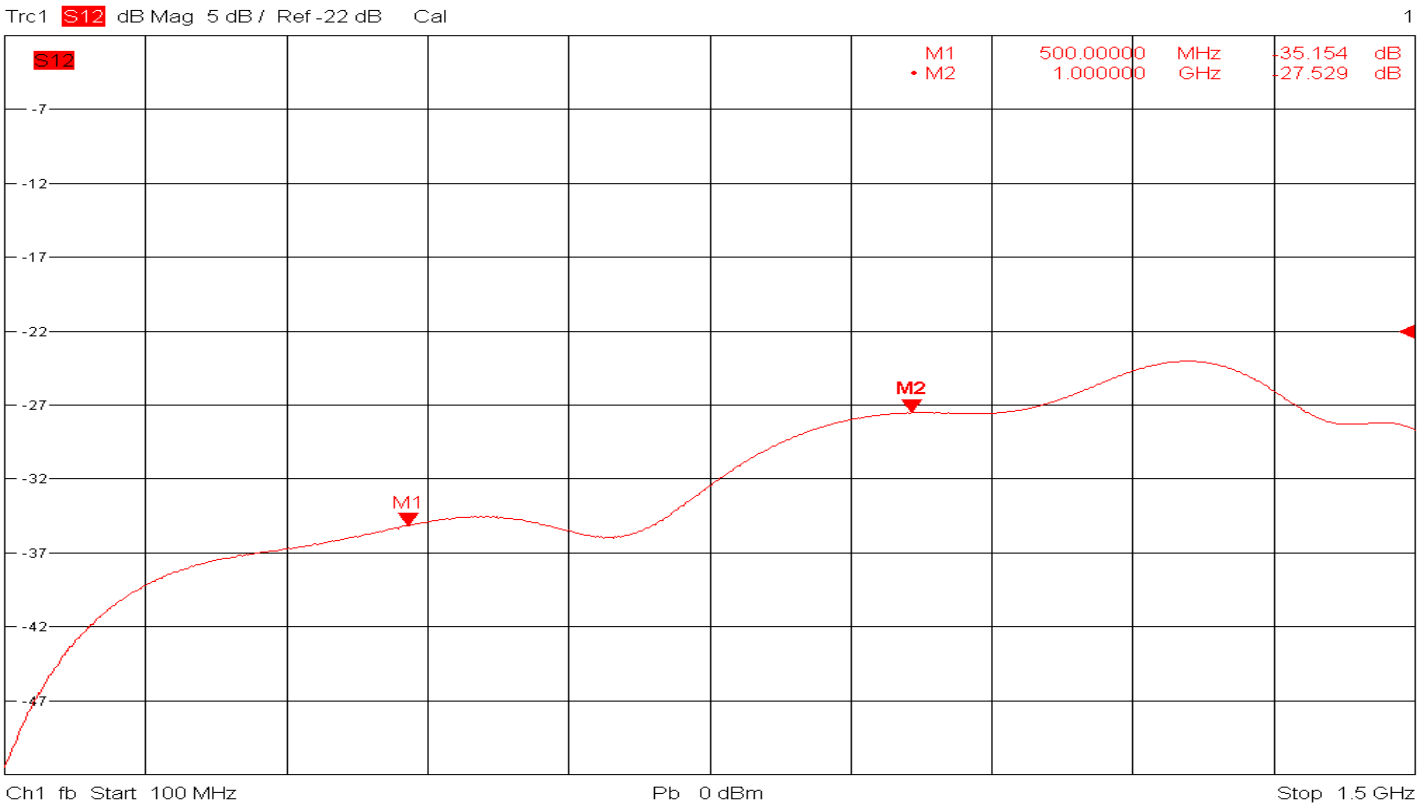

© 2014 Talent Microwave